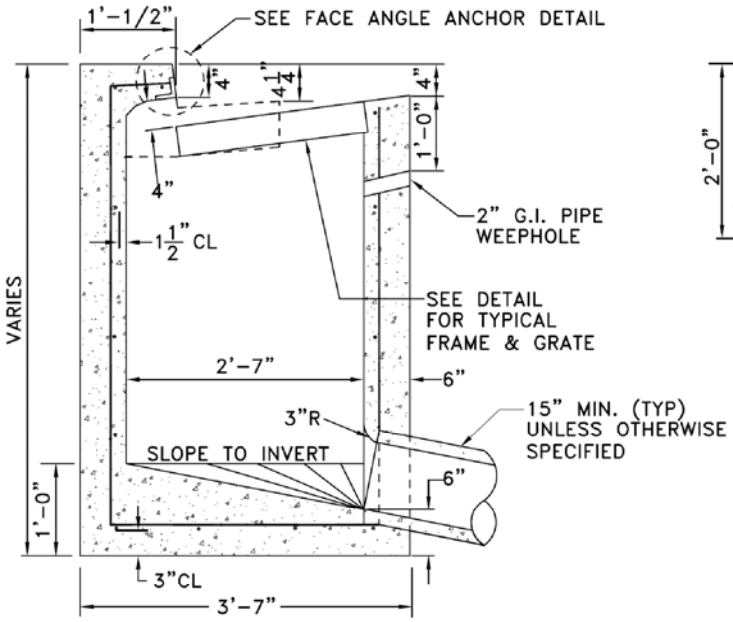

SECTION B–B

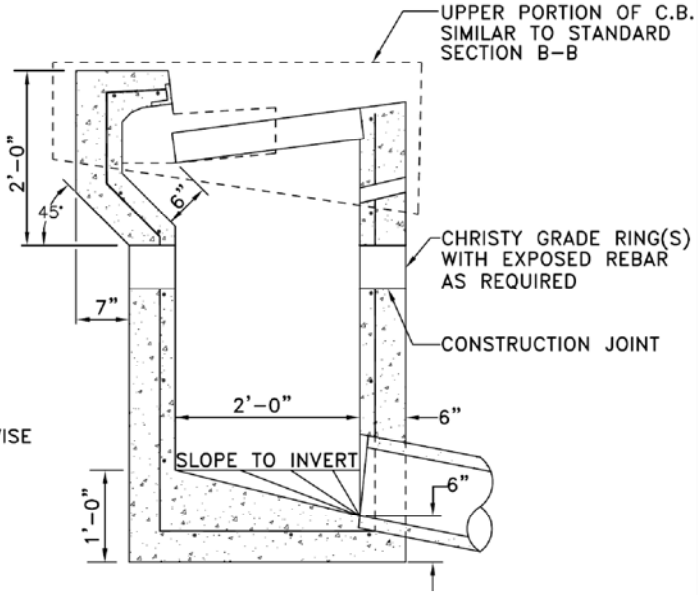

SECTION B–B
ALTERNATIVE CONSTRUCTION

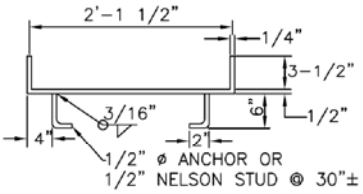

SECTION D–D

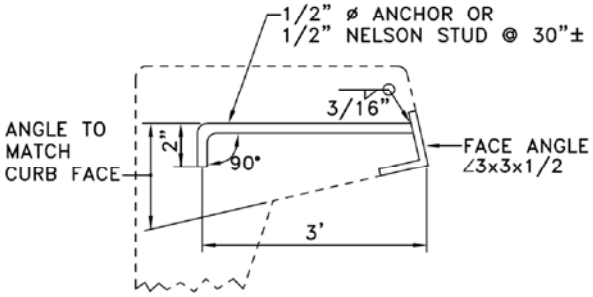

FACE ANGLE ANCHOR DETAIL

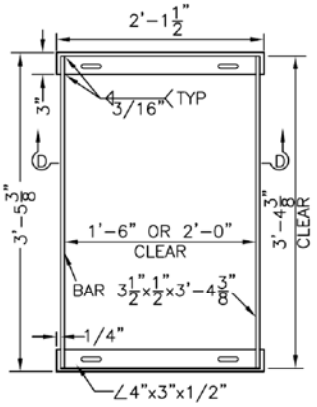

TYPICAL FRAME

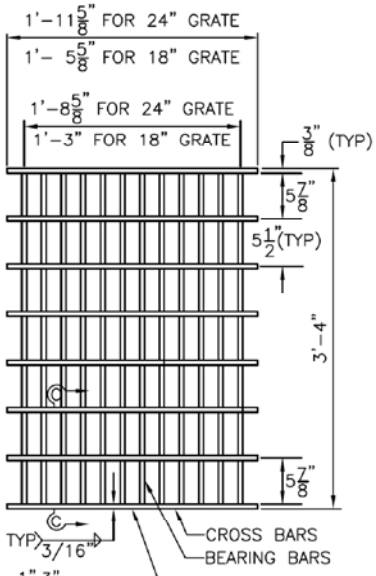

TYPICAL GRATE

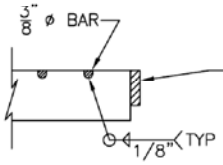

SECTION C–C

NOTES:

1. GRATE, FRAMES, AND FACE ANGLES SHALL BE HOTDIPPED GALVANIZED AFTER FABRICATION IN ACCORDANCE WITH ASTM SPEC. NO. A–123.
2. REINFORCING STEEL IN WALLS SHALL BE #4 BARS AT 12"± O.C. EACH WAY.
3. BEARING BARS FOR GRATES SHALL BE $3\frac{1}{2}$" x $\frac{3}{8}$" BARS ON $1\frac{7}{8}$" CENTER.
4. USE NO. 12 BARS FOR 24" GRATE, NO. 9 BARS FOR 18" GRATE. 24" GRATE WEIGHT 192 LBS, 18" GRATE WEIGHT 145 LBS.
5. 3/8"ø CROSS BARS FOR GRATES MAY BE FILLET WELDED, RESISTANCE WELDED OR ELECTROFORGED TO BEARING BARS.
6. ALL CONCRETE SHALL BE STATE CLASS A (6 SACK MIX).
7. PRECAST OR CAST–IN–PLACE CONCRETE UNIT BASED ON STATE TYPE "GO" IS ACCEPTABLE ALTERNATE.

City of San Bruno Standard Detail	CATCH BASIN SECTION AND DETAILS	DATE: AUG 2011 DRAWN BY:
	CITY ENGINEER: APPROVED BY: WING WONG R.C.E. C35688	SD–02 DETAIL NO: