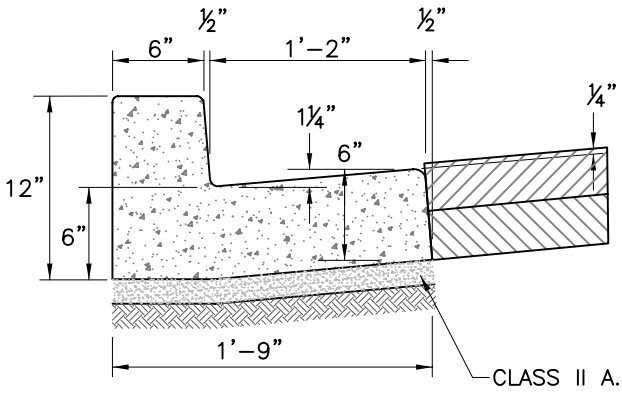

STANDARD CURB & GUTTER

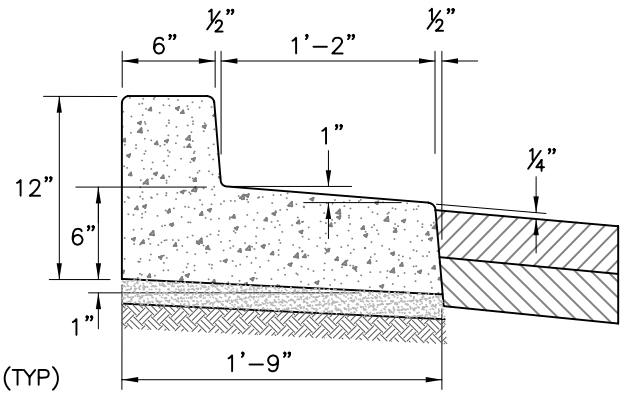

REVERSE PITCH CURB & GUTTER

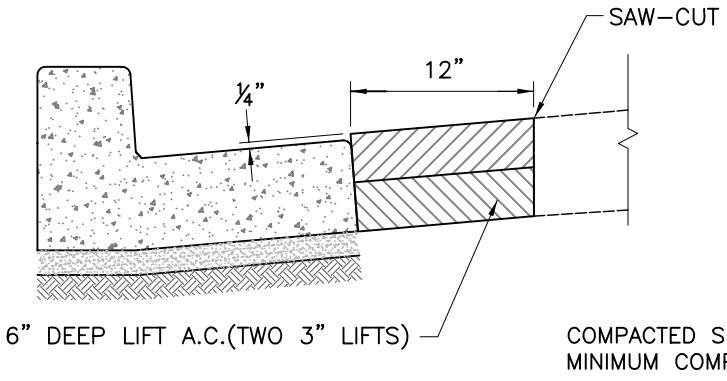

GUTTER & DRIVEWAY REPAIR (TYP.)

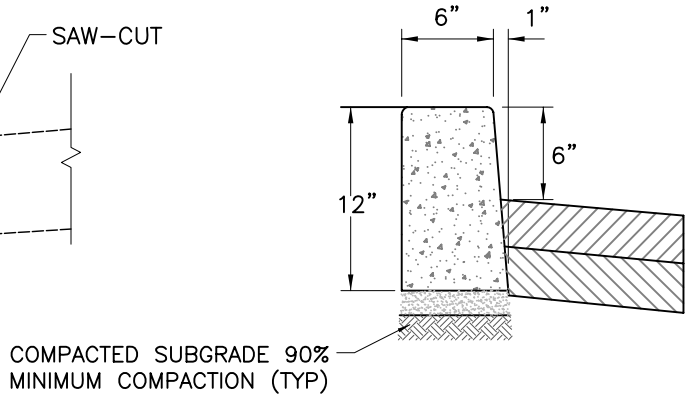

VERTICAL CURB

NOTES:

1. ALL WORK AND MATERIALS SHALL CONFORM TO APPLICABLE SECTIONS OF CALTRANS SPECIFICATIONS AND CITY OF SAN BRUNO SPECIFICATIONS AND STANDARD DRAWINGS.
2. GROUND SHALL BE COMPACTED TO A MINIMUM OF 90% RELATIVE COMPACTION, AND DAMPENED BEFORE PLACING NEW CONCRETE. 2"–4" CLASS II A.B. TO BE USED IN AREAS WITH MOIST SUBGRADE
3. ALL CONCRETE DEMOLITION SHALL BE TO SCORE LINES OR JOINTS. ALL CUTS SHALL BE SAWED NEAT AND STRAIGHT AND SHALL HAVE A MINIMUM DEPTH OF 1–1/2". WATER USED FOR SAWCUTTING OPERATIONS SHALL BE VACUUMED IMMEDIATELY.
4. ALL NEW CONCRETE SHALL BE CLASS B, USING 1–3/4" MAXIMUM SIZE AGGREGATE, 5" MAXIMUM SLUMP. FINISH TO UNIFORM FINE BROOMED TEXTURE. CONCRETE TAG TO BE SUBMITTED TO CITY INSPECTOR.
5. NEW SIDEWALKS SHALL BE SCORED TO MATCH CONTIGUOUS EXISTING SIDEWALK AND CURB. EXPANSION JOINTS TO BE ½" EX– TRUDED POLYETHYLENE FOAM OR EQUIVALENT.
6. ALL NEW CONCRETE SHALL HAVE 1 LB LAMP BLACK PER CUBIC YD TO MATCH COLOR OF ADJACENT CONCRETE TO THE MAXIMUM EXTENT POSSIBLE.
7. SUITABLE REFLECTIVE CONES, BARRICADES AND/OR WARNING LIGHTS SHALL SURROUND THE WORK AT ALL TIMES. THE CITY MAY REQUIRE THE SUBMITTAL AND APPROVAL OF A TRAFFIC/PEDESTRIAN CONTROL PLAN.
8. CONTRACTOR SHALL USE CITY APPROVED 'NO PARKING' SIGNS ISSUED WHEN THE ENCROACHMENT PERMIT IS PULLED.
9. CONTRACTOR SHALL CALL 24 HRS IN ADVANCE FOR BOTH THE PRE–POUR AND FINAL INSPECTIONS. 650–616–7065
10. UNLESS OTHERWISE NOTED, ALL RADII TO BE ½"
11. ALL WORK WITHIN CITY RIGHT–OF–WAY REQUIRES ENCROACHMENT PERMIT FROM CITY'S ENGINEERING DIVISION, ANY UNAUTHORIZED WORK WILL RESULT IN A FINE

City of San Bruno Standard Detail	CURB AND GUTTER	DATE: AUG 2011 DRAWN BY: JMH
	CITY ENGINEER: APPROVED BY: WING WONG R.C.E. C35688	ST–01 DETAIL NO: